DREMEL® 2500

PO Box 3267
4800 DG Breda, The Netherlands
www.dremel.com

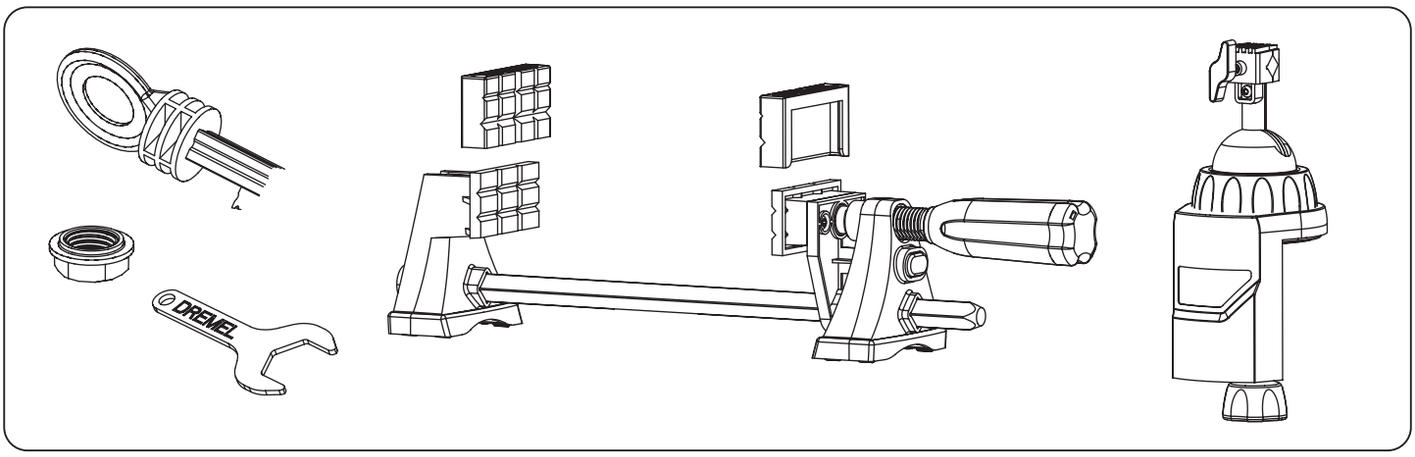

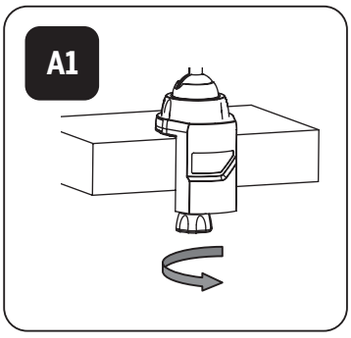

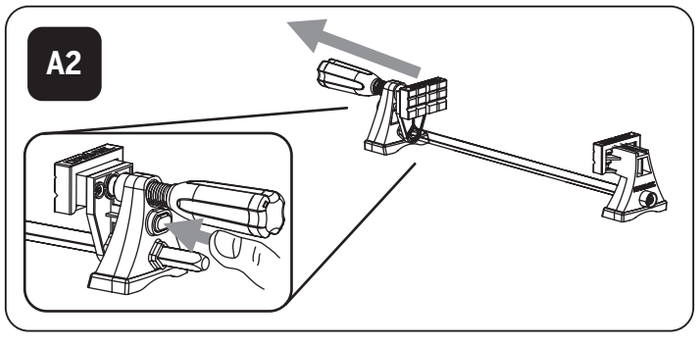

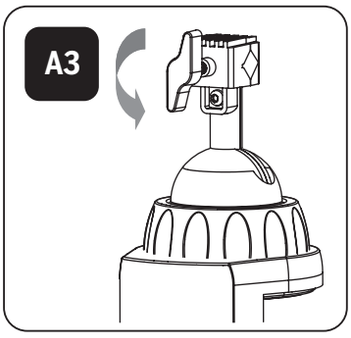

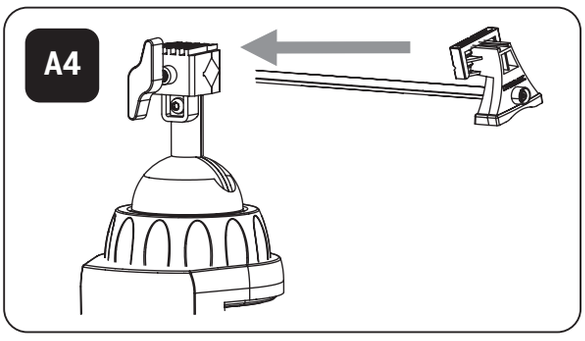

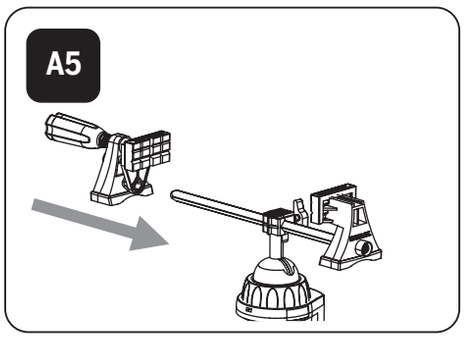

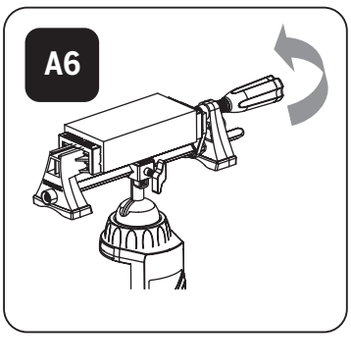

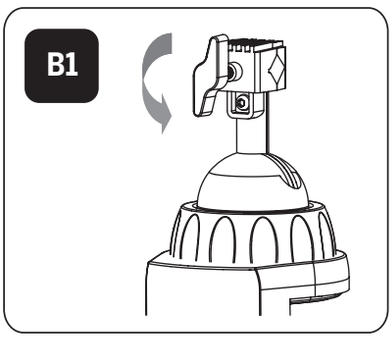

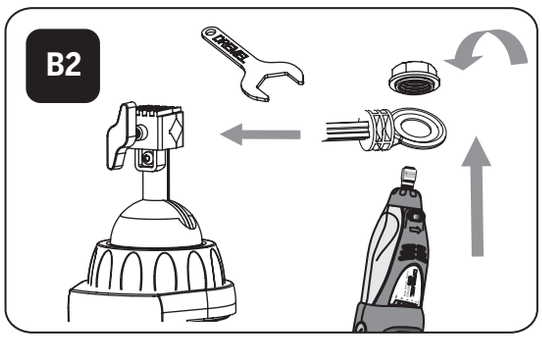

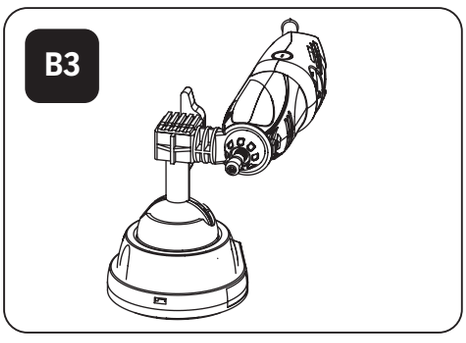

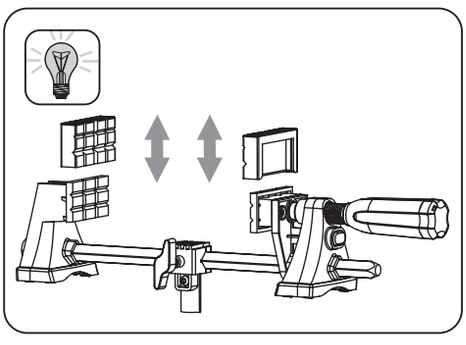

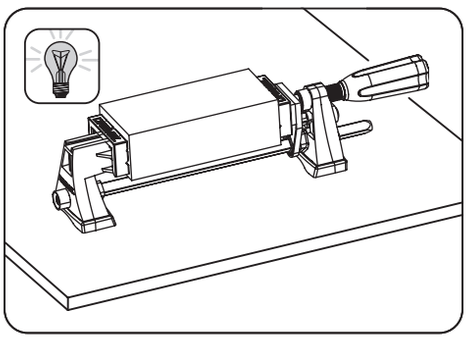

26150005435